AIR LIQUIDE	Specification Pressure Regulator	TAG - No.: **PV81020** Project No.: **K 70101**
Air Liquide AGS GmbH	Project: **ASU No. 9 KOSICE**	Page of
☒ Pressure reducer ☐ Backpressure regulator	Designation: GOX SEALGAS	Combination with TAG-No.:

Rev.								Rev.							
	1	Location	Line - No.	25 O-81020-ZB40C1					55	Control armature	Materials:				
	2		Equipment-No.						56		Casing	☒ brass	☐ stainl. steel		
	3		DN	25	PN	40	Material		57		Seat	☐ stainl. steel	☒ brass		
	4		Flanges		DIN EN 1092-1		Gasket	Form B1	58		Plug	☐ stainl. steel	☒ brass		
	5		Taps				Material		59		Gasket (soft seat)	☐ PTFE	☒ Viton		
	6	Medium	Medium	GOX (oxigen)					60		Relief skin/-diaphr.	☐ EPDM	☐ stainl. steel		
	7		Composition						61		Gasket	☐ EPDM	☒ Viton		
	8		Normal density	kg/m³	1,429				62						
	9		State inlet	☐ liquid	☒ gaseous	☐ vaporous			63						
	10		State outlet	☒ eq. inlet	☐ ... % vaporization				64	Actuator	Type				
	11	Service conditions	Operation case	case 1	case 2	case 3			65		Order-No.				
	12		Flow	Nm³/h	30				66		Actuator	☒ Diaphragm	☐ Metal bellow		
	13		P_1 (abs.)	bar	29			1	67		Range set point	0,5...40 bar (g)	adjusted	7 bar (g)	
	14		P_2 (abs.)	bar	8			1	68		Allowed press.	40 bar (g)	Spring rate N		
	15		Temperature t_1	°C	20				69		Diaphr. area		Height		
	16		Operat. density	kg/m³					70		☐ with safety valve (min. pressure limitation)				
	17	Design	Border case		min	max			71		Materials:				
	18		Allowed op. press.	bar (a)		41			72		Casing	☒ brass	☐ stainl. steel		
	19		Allowed op. temp.	°C	-25	50			73		Diaphragm/ bellow	☐ Buna	☒ Viton		
	20		Ambient temp.	°C	-25	35			74		Gaskets	☐ EPDM	☒ Viton		
	21	Control armature	Manufacturer	GHR					75						
1	22		Type	D166					76		Operation manual	☐ German	☒ English	☐ French	
	23		Order-No.						77		Quantity per type	4-fold			
	24		Model	☒ Dome contr.	☐ Spring load. contr.				78						
	25		Process	☒ DIN EN -flange, Form B1					79	Certificates	☒ Cleaned, oil and grease free acc. Standard 06401				
	26		connection	☐ Thread connection					80		☐ Cleaned, oil and grease free acc. manufacturer's standard				
	27			☐ Socket Weld					81		☒ max. sound power level L_W acc. VDMA 24422	85 dB(A)			
	28		DN	25	PN	40	Inst. length mm	373	82		☐ Indication of L_W in octave spectrum acc. VDMA 24422				
	29		Allow. inl.press.	40 bar (g)			Al. diff.press.		83		☐ AD 2000-leaflet				
	30		X_T-value				F_L-value		84		☒ Material certificate EN 10204 - 3.1.B				
	31		z-value				K_C-value		85		☒ EN 558/1 bzw. EN 12982 (Inst. Length)				
	32		K_V designed				K_{VS}	2,9	86		☒ EN 12266/1, DIN 3230/5 (Leak Test)				
	33		Leak q. % K_{VS}				Seat ϕ	12 mm	87		☒ UVV-Gase				
	34								88		☒ UVV-Sauerstoff				
	35								89		☐ Packed acc. Standard 06271				
	36								90		☒ Indication of TAG - Nr. on the type plate				
	37								91		☒ CE-marking and CE-conformity certificate				
	38								92		☒ Design acc. Pressure Equipment Directive 97/23/EG				
	39								93						
	40	Remarks													
	41														
	42														
	43														
	44														
	45														
	46														
	47														
	48														
	49														
	50														
	51														
	52														
	53														
	54														

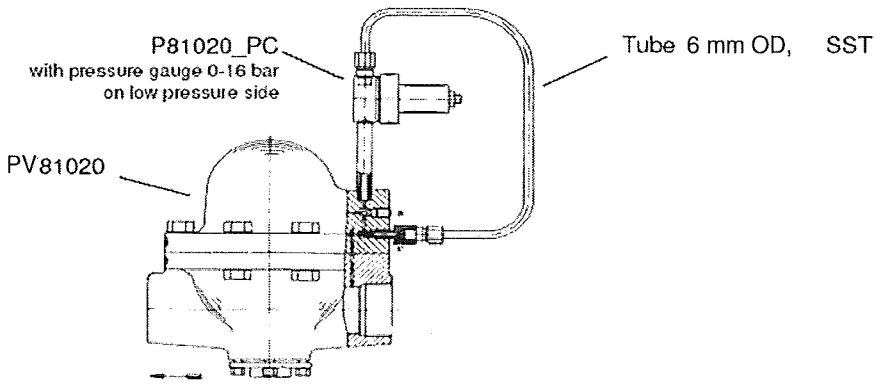

Rev.	Date	Name	Checked	Change	Rev.	Date	Name	Checked	Change
1	10.11.2004	Möller	Eichler	Order Spec.					
0	24.09.2004	Möller	Eichler	Initial Version					

AIR LIQUIDE	Specification Pressure Regulator	TAG - No.: PV81040 Project No.: K 70101
Air Liquide AGS GmbH	Project: ASU No. 9 KOSICE	Page of
☒ Pressure reducer ☐ Backpressure regulator	Designation: GAN FROM ASU TO SERVICE GAS HEADER	Combination with TAG-No.:

Rev.																							
	1	Location	Line - No.	50 N-20017-AA10C1																			
	2		Equipment-No.																				
	3		DN	50	PN	10	Material																
	4		Flanges	DIN EN 1092-1			Gasket	Form B1															
	5		Taps				Material																
	6	Medium	Medium	GAN (nitrogen)																			
	7		Composition																				
	8		Normal density	kg/m³	1,2504																		
	9		State inlet	☐ liquid	☒ gaseous	☐ vaporous																	
	10		State outlet	☒ eq. inlet	☐ ... % vaporization																		
	11	Service conditions	Operation case	case 1	case 2	case 3																	
	12		Flow	Nm³/h	500																		
	13		P_1 (abs.)	bar	7,3																		
	14		P_2 (abs.)	bar	6,2																		
	15		Temperature t_1	°C	26																		
	16		Operat. density	kg/m³																			
	17	Design	Border case		min	max																	
	18		Allowed op. press.	bar (a)		11																	
	19		Allowed op. temp.	°C	-25	50																	
	20		Ambient temp.	°C	-25	35																	
	21	Control armature	Manufacturer	Mankenberg																			
	22		Type																				
	23		Order-No.																				
	24		Model	☐ Dome contr.	☒ Spring load. contr.																		
	25		Process connection	☒ DIN EN -flange, Form B1																			
	26			☐ Thread connection																			
	27			☐ Socket Weld																			
	28		DN	50	PN	10	Inst. length mm																
	29		Allow. inl.press.				Al. diff.press.																
	30		X_T-value				F_L-value																
	31		z-value				K_C-value																
	32		K_V designed				K_{VS}																
	33		Leak q. % K_{VS}				Seat ϕ																
	34																						
	35																						
	36																						
	37																						
	38																						
	39																						
	40	Remarks																					
	41																						
	42																						
	43																						
	44																						
	45																						
	46																						
	47																						
	48																						
	49																						
	50																						
	51																						
	52																						
	53																						
	54																						

Rev.																							
	55	Control armature	Materials:																				
	56		Casing	☐ C22.8	☒ stainl. steel																		
	57		Seat	☒ stainl. steel	☐																		
	58		Plug	☒ stainl. steel	☐																		
	59		Gasket (soft seat)	☐ EU	☒ FPM																		
	60		Relief skin/-diaphr.	☐ EPDM	☐ stainl. steel																		
	61		Gasket	☐ EPDM	☐ NBR																		
	62																						
	63																						
	64	Actuator	Type																				
	65		Order-No.																				
	66		Actuator	☒ Diaphragm	☐ Metal bellow																		
	67		Range set point	4...8 bar (g)	adjusted	5,2 bar (g)																	
	68		Allowed press.	12 bar (g)	Spring rate N																		
	69		Diaphr. area		Height																		
	70		☐ with safety valve (min. pressure limitation)																				
	71		Materials:																				
	72		Casing	☐ steel	☒ stainl. steel																		
	73		Diaphragm/ bellow	☒ EPDM/PTFE	☐ NBR																		
	74		Gaskets	☐ EPDM	☐ NBR																		
	75																						
	76		Operation manual	☐ German	☒ English	☐ French																	
	77		Quantity per type	4-fold																			
	78																						
	79	Certificates	☒ Cleaned, oil and grease free acc. Standard 06401																				
	80		☐ Cleaned, oil and grease free acc. manufacturer's standard																				
	81		☒ max. sound power level L_W acc. VDMA 24422 85 dB(A)																				
	82		☐ Indication of L_W in octave spectrum acc. VDMA 24422																				
	83		☐ AD 2000-leaflet																				
	84		☒ Material certificate EN 10204 - 3.1.B																				
	85		☒ EN 558/1 bzw. EN 12982 (Inst. Length)																				
	86		☒ EN 12266/1, DIN 3230/5 (Leak Test)																				
	87		☒ UVV-Gase																				
	88		☒ UVV-Sauerstoff																				
	89		☐ Packed acc. Standard 06271																				
	90		☒ Indication of TAG - Nr. on the type plate																				
	91		☒ CE-marking and CE-conformity certificate																				
	92		☒ Design acc. Pressure Equipment Directive 97/23/EG																				
	93																						

Rev.	Date	Name	Checked	Change	Rev.	Date	Name	Checked	Change
0	24.09.2004	Möller	Eichler	Initial Version					

AIR LIQUIDE	Specification Pressure Regulator	TAG - No.: PV81041 Project No.: K 70101 Page of
Air Liquide AGS GmbH	Project: ASU No. 9 KOSICE	
☒ Pressure reducer ☐ Backpressure regulator	Designation: GAN FROM CUSTOMER TO SERVICE GAS HEADER	Combination with TAG-No.:

Rev.							
	1	Location	Line - No.	80 N-81001-AA10C1			
	2		Equipment-No.				
	3		DN	80	PN	10	Material
	4		Flanges	DIN EN 1092-1	Gasket	Form B1	
	5		Taps		Material		
	6	Medium	Medium	GAN (nitrogen)			
	7		Composition				
	8		Normal density	kg/m³	1,2504		
	9		State inlet	☐ liquid	☒ gaseous	☐ vaporous	
	10		State outlet	☒ eq. inlet	☐ ... % vaporization		
	11	Service conditions	Operation case	case 1	case 2	case 3	
	12		Flow	Nm³/h	500		
	13		P_1 (abs.)	bar	10		
	14		P_2 (abs.)	bar	5,8		
	15		Temperature t_1	°C	26		
	16		Operat. density	kg/m³			
	17	Design	Border case	min	max		
	18		Allowed op. press.	bar (a)		11	
	19		Allowed op. temp.	°C	-25	50	
	20		Ambient temp.	°C	-25	35	
	21	Control armature	Manufacturer	Mankenberg			
	22		Type				
	23		Order-No.				
	24		Model	☐ Dome contr.	☒ Spring load. contr.		
	25		Process connection	☒ DIN EN -flange, Form B1			
	26			☐ Thread connection			
	27			☐ Socket Weld			
	28		DN	50	PN	10	Inst. length mm
	29		Allow. inl.press.		Al. diff.press.		
	30		X_T-value		F_L-value		
	31		z-value		K_C-value		
	32		K_V designed		K_{VS}		
	33		Leak q. % K_{VS}		Seat ϕ		
	34						
	35						
	36						
	37						
	38						
	39						
	40	Remarks					
	41						
	42						
	43						
	44						
	45						
	46						
	47						
	48						
	49						
	50						
	51						
	52						
	53						
	54						

Rev.							
	55	Control armature	Materials:				
	56		Casing	☐ C22.8	☒ stainl. steel		
	57		Seat	☒ stainl. steel	☐		
	58		Plug	☒ stainl. steel	☐		
	59		Gasket (soft seat)	☐ EU	☒ FPM		
	60		Relief skin/-diaphr.	☐ EPDM	☐ stainl. steel		
	61		Gasket	☐ EPDM	☐ NBR		
	62						
	63						
	64	Actuator	Type				
	65		Order-No.				
	66		Actuator	☒ Diaphragm	☐ Metal bellow		
	67		Range set point	4...8 bar (g)	adjusted	4,8 bar (g)	
	68		Allowed press.	12 bar (g)	Spring rate N		
	69		Diaphr. area		Height		
	70		☐ with safety valve (min. pressure limitation)				
	71		Materials:				
	72		Casing	☐ steel	☒ stainl. steel		
	73		Diaphragm/ bellow	☒ EPDM/PTFE	☐ NBR		
	74		Gaskets	☐ EPDM	☐ NBR		
	75						
	76		Operation manual	☐ German	☒ English	☐ French	
	77		Quantity per type	4-fold			
	78						
	79	Certificates	☒ Cleaned, oil and grease free acc. Standard 06401				
	80		☐ Cleaned, oil and grease free acc. manufacturer's standard				
	81		☒ max. sound power level L_W acc. VDMA 24422 85 dB(A)				
	82		☐ Indication of L_W in octave spectrum acc. VDMA 24422				
	83		☐ AD 2000-leaflet				
	84		☒ Material certificate EN 10204 - 3.1.B				
	85		☒ EN 558/1 bzw. EN 12982 (Inst. Length)				
	86		☒ EN 12266/1, DIN 3230/5 (Leak Test)				
	87		☒ UVV-Gase				
	88		☒ UVV-Sauerstoff				
	89		☐ Packed acc. Standard 06271				
	90		☒ Indication of TAG - Nr. on the type plate				
	91		☒ CE-marking and CE-conformity certificate				
	92		☒ Design acc. Pressure Equipment Directive 97/23/EG				
	93						

Rev.	Date	Name	Checked	Change	Rev.	Date	Name	Checked	Change
0	24.09.2004	Möller	Eichler	Initial Version					

AIR LIQUIDE	Specification Pressure Regulator	TAG - No.: PV82020 Project No.: K 70101
Air Liquide AGS GmbH	Project: ASU No. 9 KOSICE	Page of
☒ Pressure reducer ☐ Backpressure regulator	Designation: GAN TO INSTRUMENT GAS HEADER	Combination with TAG-No.:

Rev.							
	1	Location	Line - No.	50 N-81003-AA10C1			
	2		Equipment-No.				
	3		DN	50	PN	10	Material
	4		Flanges	DIN EN 1092-1	Gasket	Form B1	
	5		Taps		Material		
	6	Medium	Medium	GAN (nitrogen)			
	7		Composition				
	8		Normal density	kg/m³	1,2504		
	9		State inlet	☐ liquid	☒ gaseous	☐ vaporous	
	10		State outlet	☒ eq. inlet	☐ ... % vaporization		
	11	Service conditions	Operation case	case 1	case 2	case 3	
	12		Flow	Nm³/h	250		
	13		P_1 (abs.)	bar	6		
	14		P_2 (abs.)	bar	5		
	15		Temperature t_1	°C	25		
	16		Operat. density	kg/m³			
	17	Design	Border case		min	max	
	18		Allowed op. press.	bar (a)		11	
	19		Allowed op. temp.	°C	-25	50	
	20		Ambient temp.	°C	-25	35	
	21	Control armature	Manufacturer	Mankenberg			
	22		Type				
	23		Order-No.				
	24		Model	☐ Dome contr.	☒ Spring load. contr.		
	25		Process connection	☒ DIN EN -flange, Form B1			
	26			☐ Thread connection			
	27			☐ Socket Weld			
	28		DN	50	PN	10	Inst. length mm 230
	29		Allow. inl.press.		Al. diff.press.		
	30		X_T-value		F_L-value		
	31		z-value		K_C-value		
	32		K_V designed		K_{VS}	18	
	33		Leak q. % K_{VS}		Seat ϕ		
	34						
	35						
	36						
	37						
	38						
	39						
	40	Remarks					
	41						
	42						
	43						
	44						
	45						
	46						
	47						
	48						
	49						
	50						
	51						
	52						
	53						
	54						

Rev.									
	55	Control armature	Materials:						
	56		Casing	☐ C22.8	☒ stainl. steel				
	57		Seat	☒ stainl. steel	☐				
	58		Plug	☒ stainl. steel	☐				
	59		Gasket (soft seat)	☐ EU	☒ FPM				
	60		Relief skin/-diaphr.	☐ EPDM	☐ stainl. steel				
	61		Gasket	☐ EPDM	☐ NBR				
	62								
	63								
	64	Actuator	Type						
	65		Order-No.						
	66		Actuator	☒ Diaphragm	☐ Metal bellow				
	67		Range set point	2...5 bar (g)	adjusted	4 bar (g)			
	68		Allowed press.	7,5 bar (g)	Spring rate N				
	69		Diaphr. area		Height				
	70		☐ with safety valve (min. pressure limitation)						
	71		Materials:						
	72		Casing	☐ steel	☒ stainl. steel				
	73		Diaphragm/ bellow	☒ EPDM/PTFE	☐ NBR				
	74		Gaskets	☐ EPDM	☐ NBR				
	75								
	76		Operation manual	☐ German	☒ English	☐ French			
	77		Quantity per type	4-fold					
	78								
	79	Certificates	☒ Cleaned, oil and grease free acc. Standard 06401						
	80		☐ Cleaned, oil and grease free acc. manufacturer's standard						
	81		☒ max. sound power level L_W acc. VDMA 24422 85 dB(A)						
	82		☐ Indication of L_W in octave spectrum acc. VDMA 24422						
	83		☐ AD 2000-leaflet						
	84		☒ Material certificate EN 10204 - 3.1.B						
	85		☒ EN 558/1 bzw. EN 12982 (Inst. Length)						
	86		☒ EN 12266/1, DIN 3230/5 (Leak Test)						
	87		☒ UVV-Gase						
	88		☒ UVV-Sauerstoff						
	89		☐ Packed acc. Standard 06271						
	90		☒ Indication of TAG - Nr. on the type plate						
	91		☒ CE-marking and CE-conformity certificate						
	92		☒ Design acc. Pressure Equipment Directive 97/23/EG						
	93								

Rev.	Date	Name	Checked	Change	Rev.	Date	Name	Checked	Change
0	24.09.2004	Möller	Eichler	Initial Version					

AIR LIQUIDE	Specification Pressure Regulator	TAG - No.: **PV87011** Project No.: K 70101
Air Liquide AGS GmbH	Project: **ASU No. 9 KOSICE**	Page of
☒ Pressure reducer ☐ Backpressure regulator	Designation: PURGE GAS TO COLD BOX	Combination with TAG-No.:

Rev.																								
	1	Location	Line - No.	50 N-81004-AA10C1																				
	2		Equipment-No.																					
	3		DN	50	PN	10	Material																	
	4		Flanges		DIN EN 1092-1		Gasket	Form B1																
	5		Taps				Material																	
	6	Medium	Medium	GAN (nitrogen)																				
	7		Composition																					
	8		Normal density	kg/m³	1,2504																			
	9		State inlet	☐ liquid	☒ gaseous	☐ vaporous																		
	10		State outlet	☒ eq. inlet	☐ ... % vaporization																			
	11	Service conditions	Operation case	case 1	case 2	case 3																		
	12		Flow	Nm³/h	200																			
	13		P_1 (abs.)	bar	6																			
	14		P_2 (abs.)	bar	1,1																			
	15		Temperature t_1	°C	25																			
	16		Operat. density	kg/m³																				
	17	Design		Border case	min	max																		
	18		Allowed op. press.	bar (a)		11																		
	19		Allowed op. temp.	°C	-25	50																		
	20		Ambient temp.	°C	-25	35																		
	21	Control armature	Manufacturer	GHR																				
	22		Type	J125-S1 G1 1/2"																				
	23		Order-No.																					
	24		Model	☐ Dome contr.	☒ Spring load. contr.																			
	25		Process connection	☒ DIN-flange, DIN EN 1092-1 Form B1																				
	26			☐ Thread connection																				
	27			☐ Socket Weld																				
	28		DN	40	PN	10	Inst. length	in																
	29		Allow. inl.press.	10 bar (g)	Al. diff.press.																			
	30		X_T-value		F_L-value																			
	31		z-value		K_C-value																			
	32		K_V designed		K_{VS}																			
	33		Leak q. % K_{VS}		Seat ϕ	9,5 mm																		
	34																							
	35																							
	36																							
	37																							
	38																							
	39																							
	40	Remarks																						
	41																							
	42																							
	43																							
	44																							
	45																							
	46																							
	47																							
	48																							
	49																							
	50																							
	51																							
	52																							
	53																							
	54																							

Rev.																								
	55	Control armature	Materials:																					
	56		Casing	☒ GGG 40.3	☐ 316 L																			
	57		Seat	☐	☐																			
	58		Plug	☐	☐																			
	59		Gasket (soft seat)	☐ PTFE	☒ Buna																			
	60		Relief skin/-diaphr.	☐ EPDM	☐ 316 L																			
	61		Gasket	☐ EPDM	☐ NBR																			
	62		Piston ring	☐ PTFE/coal	☐																			
	63																							
	64	Actuator	Type																					
	65		Order-No.																					
	66		Actuator	☒ Diaphragm	☐ Metal bellow																			
	67		Range set point	70...140 mbar	adjusted	100 mbar																		
	68		Allowed press.	10 bar (g)	Spring rate N																			
	69		Diaphr. area		Height																			
	70		☐ with safety valve (min. pressure limitation)																					
	71		Materials:																					
	72		Casing	☐ GGG 40.3	☒ Alu																			
	73		Diaphragm/ bellow	☒ Buna	☐ NBR																			
	74		Gaskets	☐ EPDM	☐ NBR																			
	75																							
	76		Operation manual	☐ German	☒ English	☐ French																		
	77		Quantity per type	4-fold																				
	78																							
	79	Certificates	☐ Cleaned, oil and grease free acc. Standard 06401																					
	80		☒ Cleaned, oil and grease free acc. manufacturer's standard																					
	81		☒ max. sound power level L_W acc. VDMA 24422 85 dB(A)																					
	82		☐ Indication of L_W in octave spectrum acc. VDMA 24422																					
	83		☐ AD 2000-leaflet																					
	84		☒ Material certificate EN 10204 - 2.2																					
	85		☒ EN 558/1 bzw. EN 12982 (Inst. Length)																					
	86		☒ EN 12266/1, DIN 3230/5 (Leak Test)																					
	87		☒ UVV-Gase																					
	88		☐ UVV-Sauerstoff																					
	89		☐ Packed acc. Standard 06271																					
	90		☒ Indication of TAG - Nr. on the type plate																					
	91		☒ CE-marking and CE-conformity certificate																					
	92		☒ Design acc. Pressure Equipment Directive 97/23/EG																					
	93																							

Rev.	Date	Name	Checked	Change	Rev.	Date	Name	Checked	Change
0	05.11.2004	Möller	Eichler	Initial Version					